UPEC 2016, Coimbra,Portugal

6th Sept -9th Sept 2016

SIZING AND TECHNO-ECONOMIC ANALYSIS OF A GRID CONNECTED PHOTOVOLTAIC SYSTEM WITH HYBRID STORAGE

Faycal BENSMAINE

Dhaker ABBES Dhaker.abbes@hei.fr

Antoine LABRUNIE

Benoit ROBYNS

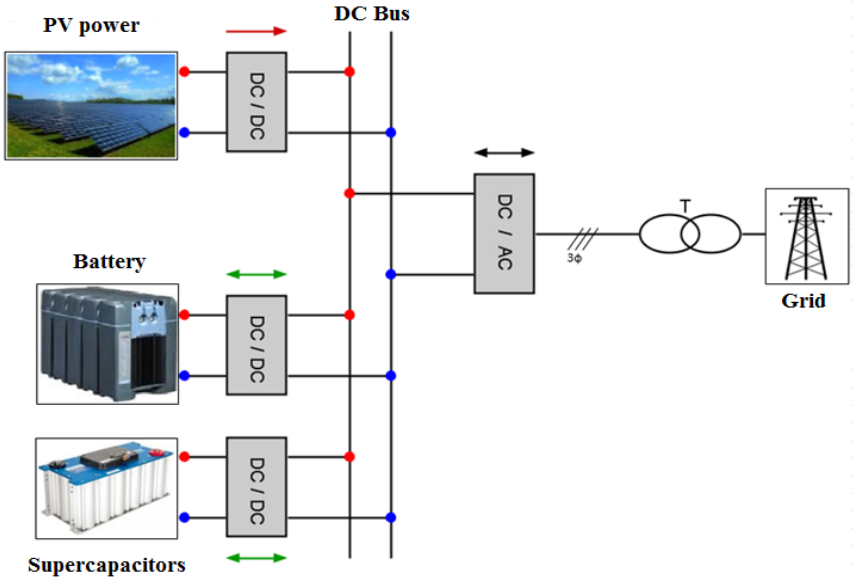

Plan

- INTRODUCTION
- STUDIED PHOTVOLTAIC SYSTEM DESCRIPTION
- SYSTEM ENERGY MANAGEMENT
- EVALUATION INDICATORS
- CASE STUDY AND SIMULATION RESULTS
- CONCLUSION AND PERSPECTIVES

INTRODUCTION

- The Energy productions from renewable energy sources such as photovoltaic generators are characterized by uncertainty and intermittence. They are greatly influenced by meteorological conditions.

- Thus. to ensure good stability of the electric network. it is necessary to store part of the produced energy. In fact. there are several methods of storage: potential form (STEP). kinetic (flywheel). hydrogen. in an electrochemical battery (lead. lithium) or a super-capacitor.

- Currently. there are several companies that sell storage solutions for network support or future integration into smart grids. such as:
  - ✓ Li-ion batteries containers (Saft. Mitsubishi Heavy Industries).
  - ✓ Batteries Sodium-Sulfur (NaS) (NGK).
  - ✓ Hydrogen production and storage systems (CETH2 and McPhy).
  - ✓ Flywheel systems (Vycon. Beacon Power).
  - ✓ Super-capacitors containers (Maxwell).

- However. It is rare at the moment a system dedicated to electricity network and combining these various technologies; these systems staying at the moment in development.

In this work. This work concerns a photovoltaic system that combines two storage technologies (one for energy needs NCA batteries and another for power SuperCaps Maxwell). A smart supervision algorithm based on fuzzy logic has been successfully developed.

In addition. a comparative study of different storage configurations especially in terms of storage components lifespan and system Levelized Cost of Energy (LCOE) has been carried out. A life cycle cost analysis has been made to help designers in their choice.

The main purpose of adding a source of power storage is to smooth the power flow in case of intermittency of photovoltaic source and to increase the lifetime of the energy storage one.

STUDIED PHOTOVOLTAIC SYSTEM DESCRIPTION

Architecture

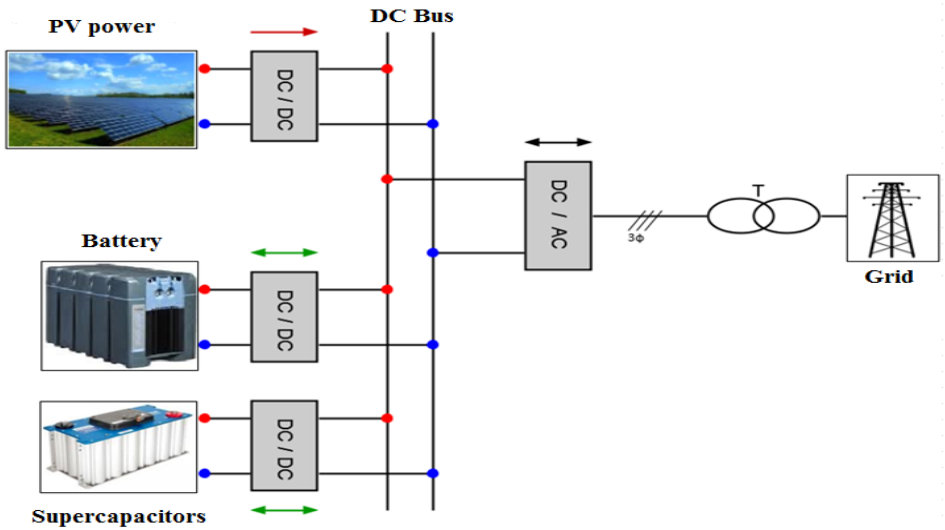

Management structure

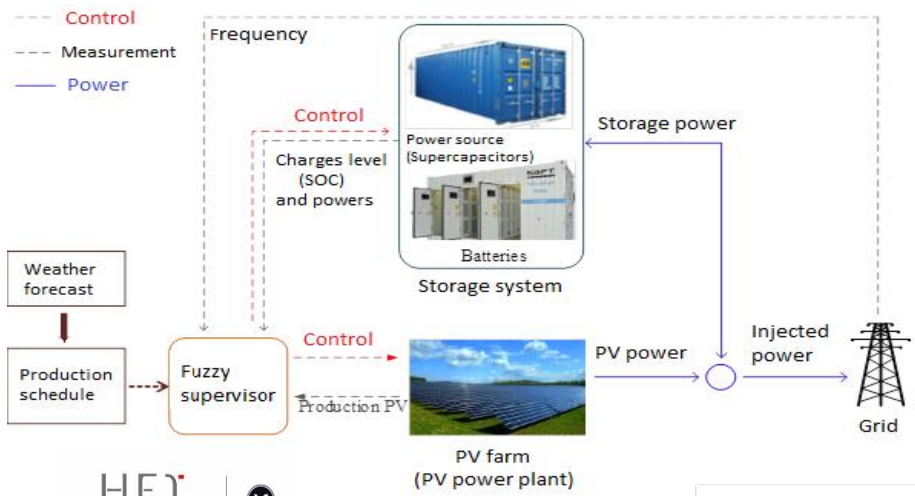

We consider a photovoltaic system with hybrid storage. Storage station is based on combination of two complementary technologies: a source of power storage (super-capacitors) and a source of energy storage (lithium batteries NCA with high specific energy).

METHODOLOGY

Energy management is made with a multi-step fuzzy logic methodology. It ensure several objectives at once (constraints and network services. storage levels and availability. lifespan and aging. etc.).In our case. flow management is intend to satisfy Day-1 production planning. to participate in frequency support and to protect storage elements monitoring their state of charge.

- Work specifications
- Design of the supervisor
- Chart representation of operating modes -Functional graphs -
- Determination of the membership functions
- Chart representation of fuzzy operating modes - Operational graphs -
- Determination of the fuzzy rules
- Determination of indicators to measure the achievement of objectives

Supervisor operating specifications

Objectives	Constraints	Actions
. Meet a production schedule ensuring injected power smoothness. . Participate in frequency support (primary and secondary Supports). . Improve storage elements life by optimizing their management.	. PV production intermittency (amplitude and duration variations). . Storage elements size . Primary support in less than 500sec for 15 minutes. Response in less than 15 minutes for 30 minutes in case of secondary support. (Error of 0.5% with respect to the basic frequency 50 Hz). . The error on the production schedule : - If the producer does not fulfill his announcement with a tolerance of ± 5% of installed capacity. penalties will be applied.	. Two power storage references: - long-term (batteries). - short-term (power source: example: super-capacitors). . Degradation factor of photovoltaic production.

Block diagram of the fuzzy supervisor

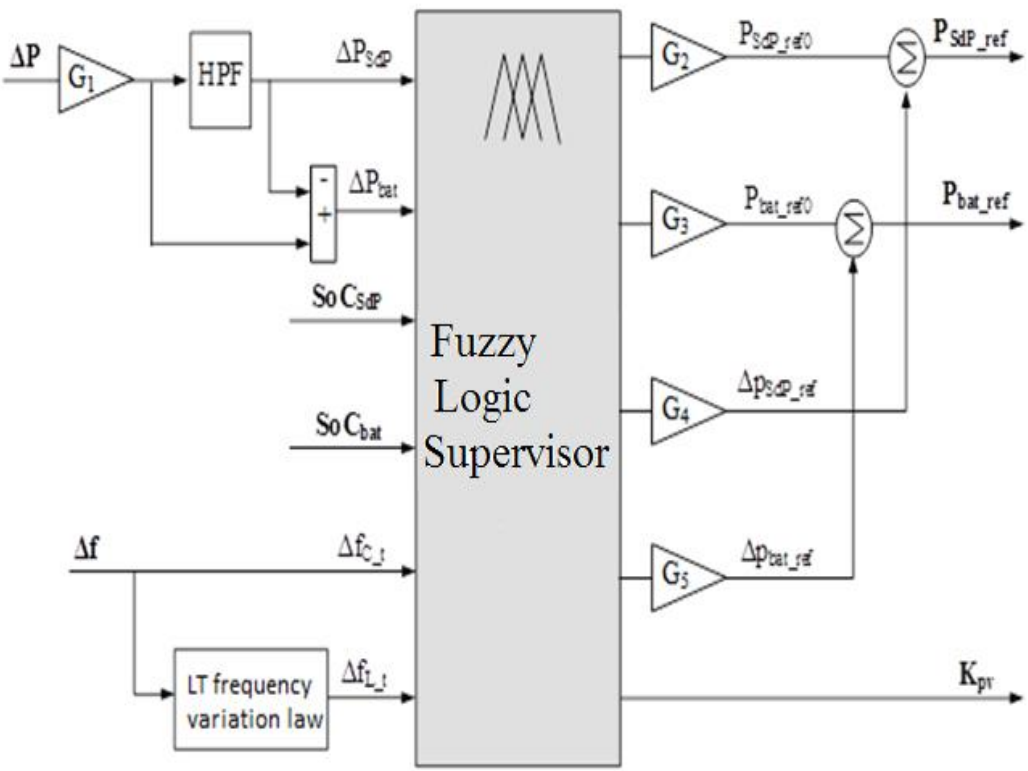

ΔP : Difference between planned and actual photovoltaic power production.

ΔP_{bat} and ΔP_{SdP} : respectively batteries and super-capacitors powers after filter separation.

SOC_{bat} and SOC_{SdP} : respectively batteries and super-capacitors State Of Charge.

Δf : Frequency variation with Δf_{C_t} for short term variations and Δf_{L_t} for long term ones.

P_{bat_ref} : Batteries reference power. It is the sum of two sub-outputs, initial reference P_{bat_ref0} and secondary support power frequency Δp_{bat_ref}.

P_{SdP_ref} : Storage power source (super-capacitors) reference. It is the sum of two sub-outputs, initial reference P_{SdP_ref0} and primary support power frequency Δp_{SdP_ref}.

$G_{i=1:5}$: Normalization gains. **HPF**: high pass filter (first-order filter). K_{pv}: PV production degradation factor.

Supervision strategy functioning modes

- **Normal or main mode (N1):** The SOC is medium or nominal (SOC_M) and the first aim of this mode is to meet the production program planned at day-1. The storage system has to fill the gap between the instantaneous power and photovoltaic production planned in day-1 while maintaining the functionality of power smoothing and frequency support.

- **Overcharge mode (N2):** This mode is dedicated to protecting storage system against the harmful effect of an overcharge on their lifespan. The principle is to minimize photovoltaic generation to discharge the storage elements until their nominal value.

- **Deep discharge mode (N3):** This mode is dedicated to protecting storage system against the harmful effects of deep discharge on their lifespan. The principle is to guarantee storage capacity by well preparing storage elements to production program. Ideally charge storage organs until their nominal value. Charge may be provided by photovoltaic production on the same day before beginning the production program (e.g. in a summer day) or directly from recharging via the grid.

EVALUATION INDICATORS

Performance indicators

- Indicator of program production satisfaction: This indicator is based on the MAPE score evaluated each 30 minutes with the formula:

$$M = \frac{100}{n} \sum_{t=0}^{n} \frac{|E_{inj} - E_{pg}|}{E_{pg}}$$

E_{inj} : injected 30 min energy to the grid and E_{pg} planned production.

- Indicator of frequency changes: This indicator is based on calculating the average of frequency change in 15 minutes: $\frac{1}{T}\sum_{t=0}^{T}|\Delta f_{C\_t}|$.

Financial indicator

Financial indicator proposed in this study is built based on Annex 10 of the call to tender CRE 2015 for No Interconnected Zones. Indeed. each 1 minute. the remuneration of produced energy is:

$$Ecos = Prod * \frac{kWhcost}{60}$$

For each minute. if the producer does not fulfill his announcement with a tolerance of ± 5% of installed capacity. penalties will be applied.

EVALUATION INDICATORS

Batteries lifspan

Principle of batteries deterioration calculating

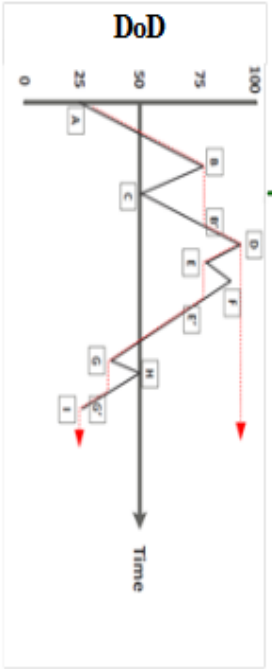

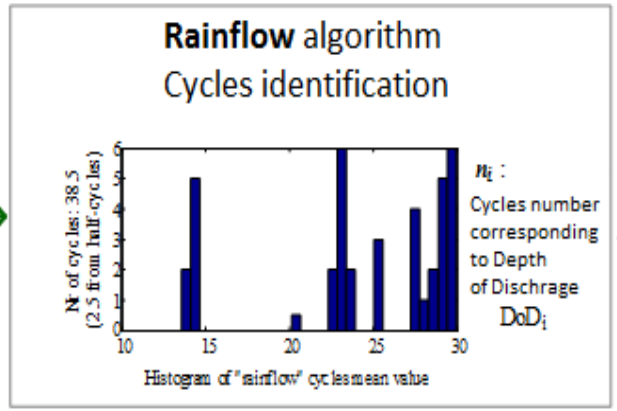

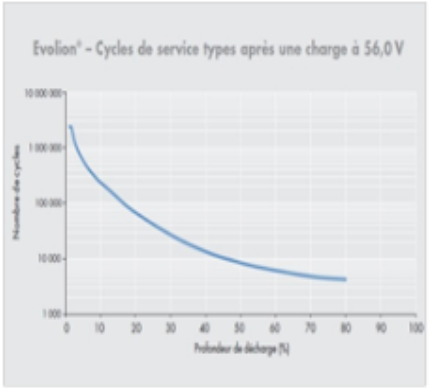

N_i :
Lifespan corresponding to amplitude DoD_i

Law of damage accumulation **(Miner):**
$D = \sum (n_i/N_i)$

This method relies on two steps : The first step is the use of a cycle counting algorithm (Rainflow) that precisely identifies the parameters of a battery lifespan (number of cycles. deep cycles. standard cycles (complete or half cycles) and the periods of the cycles). The second step consists on using the aging curve of the storage component to identify its lifespan according to the respective cycles depths found in the first step

Photovoltaic power input data

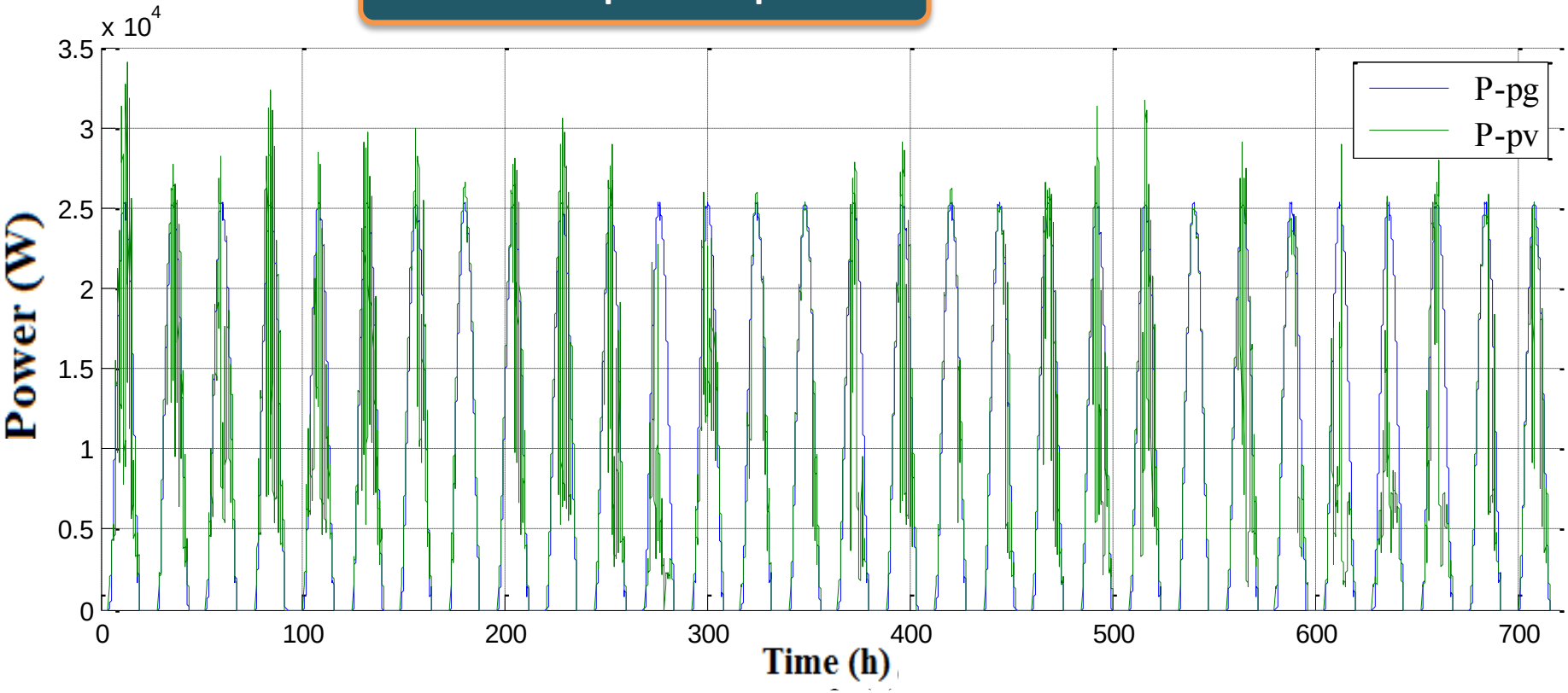

Scenarios of photovoltaic generated and planned power correspond to forecasts at Day + 1 in a real site for year 2013. These data are collected on an hourly average. Realistic month profiles are considered with some modifications to incorporate effects of sudden weather changes.

Supervisor validation

Scenarios Simulations are done according to these powers:
Photovoltaic source peak power: 30 kW.
Nominal NCA lithium batteries power (energy storage source): 15 KW. 39 kWh (P_max = 17 kW).
Nominal power for storage power source (super-capacitors): 5 KW. 52 Wh (165F and 48V) for cost reasons.

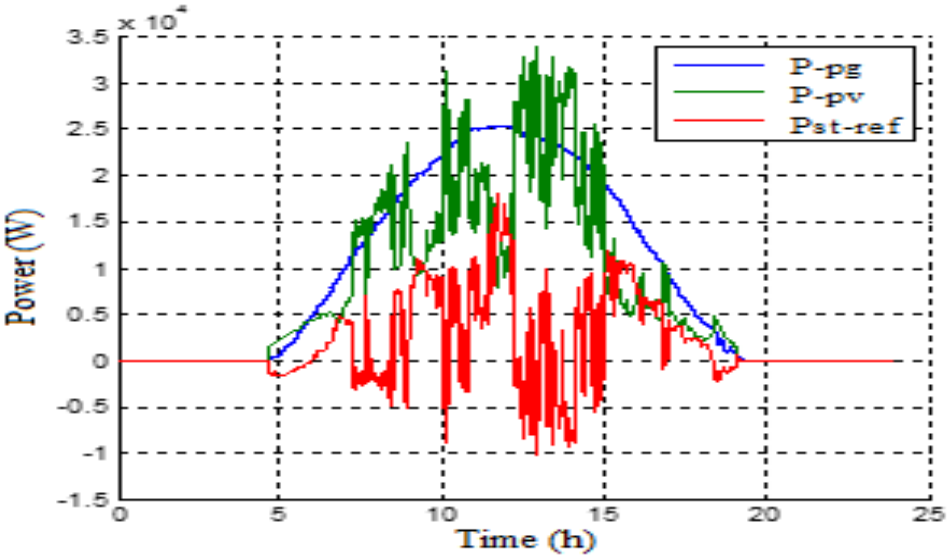

Evolution of PV power plant powers for a day (30 KW PV+ 15KW of batteries + 5 KW of super-capacitors)

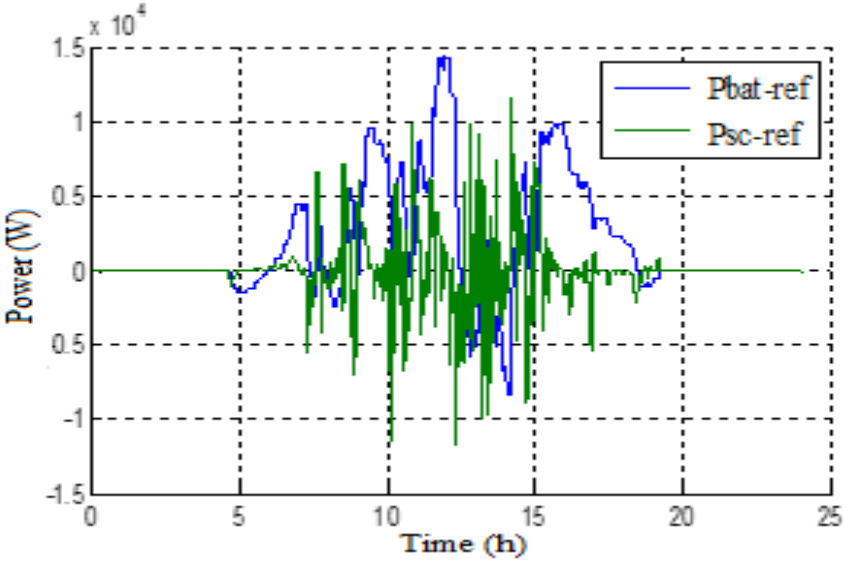

Complementary operation between NCA lithium batteries and super-capacitors power storage source.

Supervisor validation

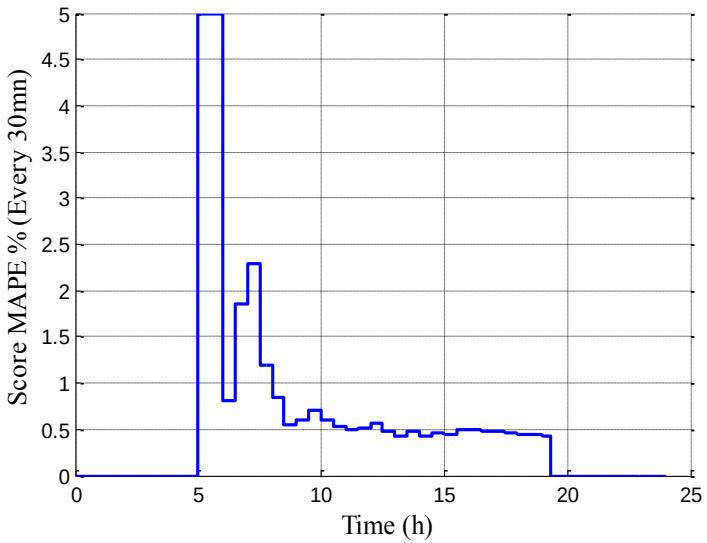

Percentage of error on production program satisfaction (MAPE score evaluated every 30 minutes).

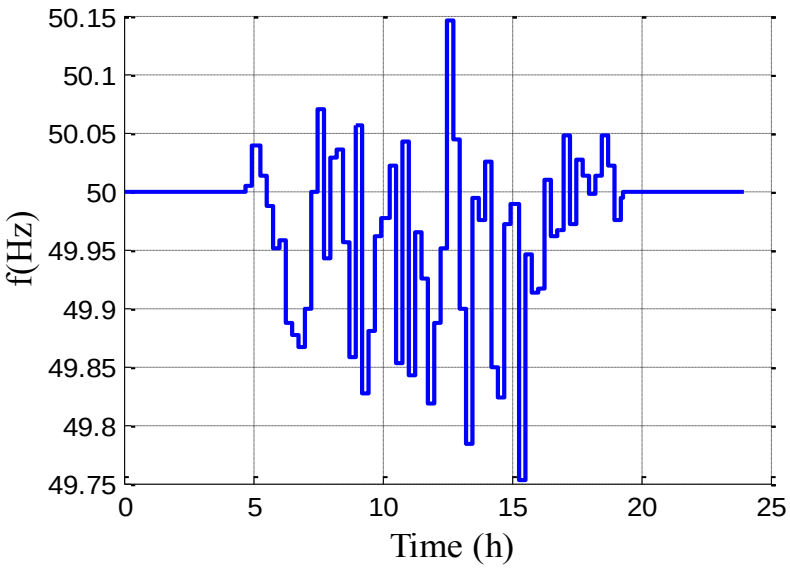

Evolution of frequency every 15 minutes.

Percentage of error on production program satisfaction (MAPE score evaluated every 30 minutes) remains below 5 % for studied case.

Network support function reduces frequency variations amplitude.

Techno-economic analysis and levelized cost of energy

Assumptions

- Lifespan of the 30 kW PV power plant : 25 years;
- Price of lithium ion batteries: 350 € / kWh;
- Costs of transformer station storage : 200€/kW;
- Costs of operation and maintenance (O&M) for one year 20k€/MWp;
- Costs of O&M of storage for one year : 10k€/MW;
- Costs of electrical equipment : 200€ / kWp;
- Price of photovoltaic panels (PV): 0.5€/ Wp;
- Costs of installation of photovoltaic panels (Inst_PV) : 150€/kWp;
- Costs of road network utility (RNU_cost): 100€ / kWp;
- Discount rate (r): 7%;
- Degradation of production for one year: 0.5%.
- Cost communicated by the producer in its response to the tender : 250€/MWh.

Techno-economic analysis and levelized cost of energy

Storage cost for different powers for 25 years.

Batteries Power KW	Batt. Cap. (KWh)	Batt. cost (k€)	Nb of batteries replace.	Batt. total cost in 25 years (k€)	5 KW SuperCap. cost (k€)	Total storage cost (k€)
Case 1 : 10	24.864	8.7	25	217.5	1.200	218.7
Case 2 : 15	35.520	12.4	5	62	1.200	63.2
Case 3 : 30	**71.04**	**24.9**	**2**	**49.8**	**1.200**	**51**
Case 4 : 45	106.56	37.3	2	74.6	1.200	75.8

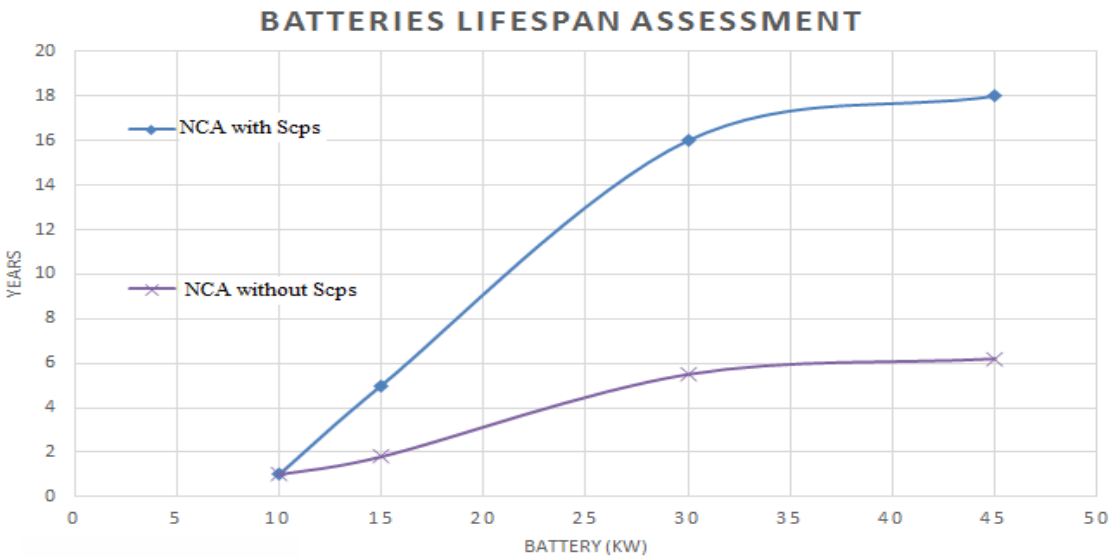

Techno-economic analysis and levelized cost of energy

LCOE is given by the following equation:

LCOE (€/MWh) = Storage_total_cost + PV_generator_total_cost + O&M_total + Equipment_cost + Inst_PV + RNU_cost + penalties) / (Total Energy produced in 25 years).

With : : $O\&M_{total} = (O\&M)_{year} \times (1+r)^{nb\_years}$

For case 3 :

If we suppose France north conditions production 1000 kWh /KW/year, we found : LCOE = **194 €/MWh**.

CONCLUSION AND PERSPECTIVES

Conclusions

- The use of super-capacitors as a power source in combination with lithium batteries (NCA energy source) appears as one of the most reasonable choice in terms of lifespan.

- System sizing is crucial. It influences batteries life time and frequency regulation.

- To have a good frequency adjustment with respect of the production program and with a reasonnable storage total cost a power storage ≥ 50% installed PV power must be used. A ratio of 1 is recommended.

- The studied system have a LCOE below 250€/MWh

Perspectives

In our future work, we propose to validate the developed energy management fuzzy logic method on a test bench with a realistic reproduction in terms of powers and emulation time.

Thank you for your attention!

Dr.Ing. Dhaker ABBES
Dhaker.abbes@yncrea.fr
Ecole des Hautes Etudes d'Ingénieur .
Lille. France

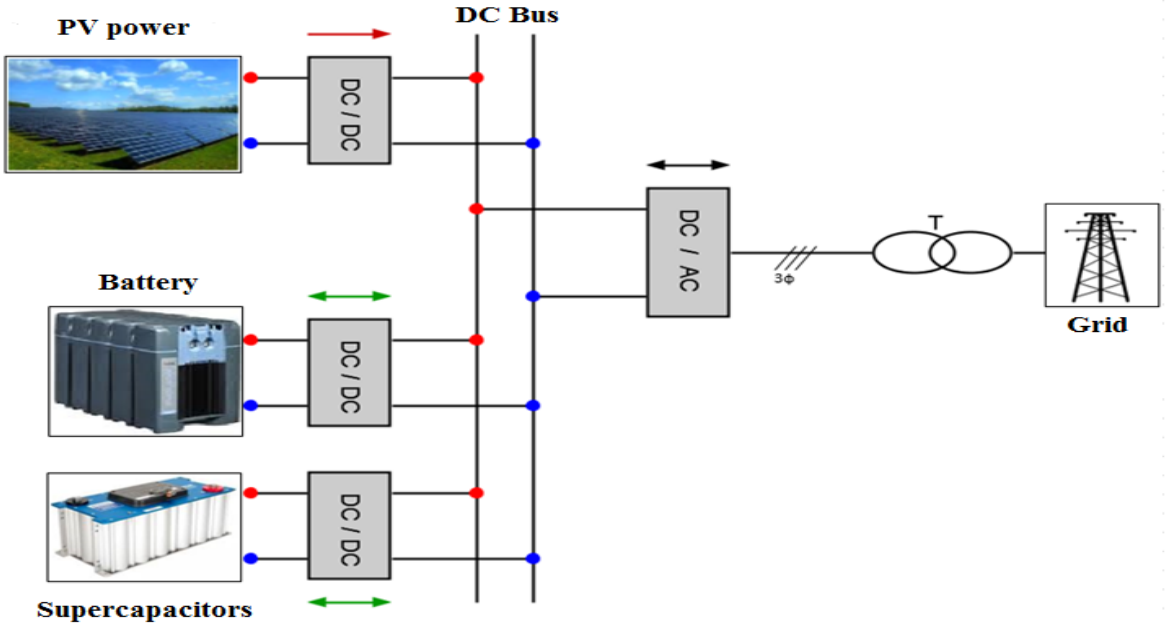

HEI INGÉNIEURS POUR LE MONDE

GB SOLAR Groupe Greenbirdie

L2EP Laboratoire d'électrotechnique et d'électronique de puissance de Lille